Liano Mystic

Rail Shower

Liano Rail Shower

Product Code: 91014C3A

- WELS 3 star rated, 9L/min
- Height adjustable
- Four spray options
- Matching Caroma Liano tapware and mixer ranges

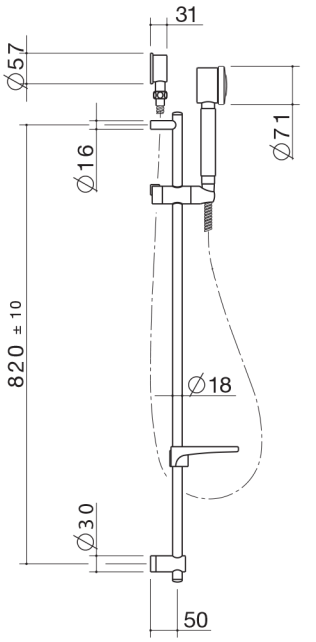

Mystic Rail Shower

Product Code: 91013C3A
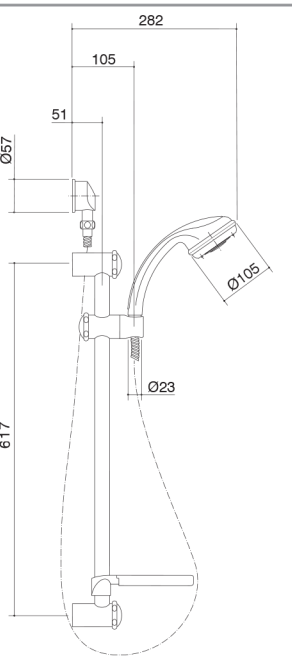
- WELS 3 star rated, 9L/min
- Height adjustable
- Five spray options