# Caroma®

# Luna NTL

## Semi-Recessed Basin

200mm 100mm 0

Scale

100mm

200mm

Ø20mm hole

Installation must be in accordance with AS/NZS 3500.2

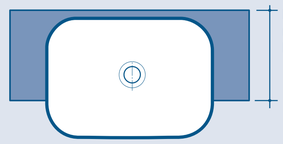

**Note:** Local authorities have requirements for minimum basin to wall dimensions.

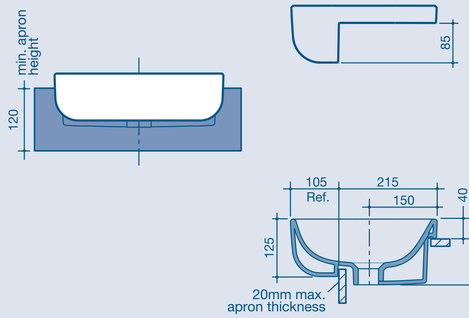


Ø20mm hole

**PLUMBERS INSTALLATION INSTRUCTIONS**

**Luna No Tap Landing Semi Recessed Basin Fitting Sequence Using D250 Bracket**

1- Fold template and place over countertop and apron.
2- Attach template cut-out guide to countertop with adhesive tape or otherwise transfer cut-out line to countertop.
3- Cut out countertop with care.
4- Fit waste assembly to basin.
5- Apply a layer of acetic cured silicone sealant around the sealing rim and apron. **Important: Do not use epoxy sealants.**
6- Align and secure the brackets to the underside of countertop in the corner positions as shown.
7- Attach the brass Tie Hooks to the holes in the basin and lower into opening. Secure from underneath.

**IMPORTANT:**
**EPOXY TYPE GLUES MUST NOT BE USED.**

**NOTE:**
**FOR GRANITE OR MARBLE TOPS, FIX TWO 20MM THICK WOODEN BLOCKS IN THE BRACKET POSITION ON THE UNDERSIDE OF THE GRANITE/MARBLE WITH FAST SETTING TWO PART EPOXY. WHEN FULLY SET SCREW THE BRACKETS INTO POSITION ON THE WOODEN BLOCKS. OTHER SUITABLE FASTENING SYSTEMS MAY BE USED.**

**IMPORTANT:**
**PLEASE NOTE: THE TEMPLATE FOLD LINE BETWEEN THE HORIZONTAL AND VERTICAL SURFACES MUST REMAIN AS A SHARP RIGHT ANGLE. ROLLING THE TEMPLATE OVER A RADIUS MAY CAUSE THE CUT OUT TO BE TOO BIG FOR THE BASIN**

Counter Top (horizontal surface)

Fold

Fold

Counter apron (vertical surface)

**Cut-out Template**

**D250. Fixing Bracket**

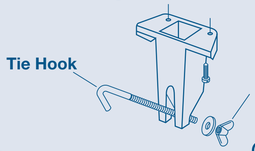


Ø20mm hole

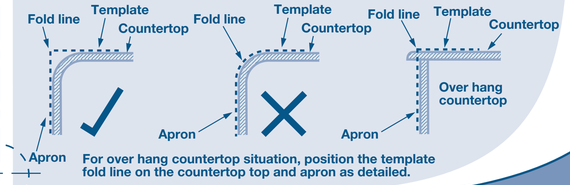


**For over hang countertop situation, position the template fold line on the countertop top and apron as detailed.**

**Basin Rim**

**999927TMC**

07.06.23
Issue No: 3